Inverter Series Generator Operator Manual

Models WI2000P/WI2000CP, WI2600P/WI2600CP

May 2017 P/N 220881 Rev. A

PREFACE

Thank you for purchasing a Wanco portable inverter generator set. This manual contains important safety and operating information - please read the complete manual before attempting to operate the generator.

All information in this publication is based on the latest product information available at the time of approval for printing. We reserve the right to make changes at any time without notice.

No part of this publication may be reproduced without written permission.

Throughout this manual pay special attention to statements preceded by the following signal words:

⚠ DANGER	Failure to properly follow these precautions is likely to result in property damage, serious injury or death
⚠ WARNING	Failure to properly follow these precautions can result in property damage, serious injury or death
⚠ CAUTION	Indicates a possibility of personal injury or equipment damage if instructions are not followed
NOTICE	Gives helpful information.

If you need assistance with your generator set, please contact our service department:

Wanco Inc.
5870 Tennyson Street
Arvada, Colorado 80003
303-427-5700
fax 303-427-5725
www.wanco.com
info@wanco.com

CONTENTS

Read and understand this Operator Manual before starting the generator. Failure to do so could result in personal injury or equipment damage.

SAFETY INSTRUCTIONS

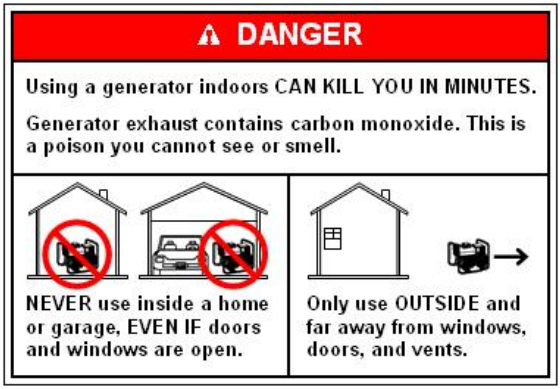

DANGER

Exhaust gas contains invisible but poisonous carbon monoxide. Never run the generator in an enclosed area.

Gasoline vapor is invisible but extremely flammable and explosive under certain conditions. Shut the engine OFF and allow the generator to cool for two minutes before refueling. Never refuel while the engine is running.

Keep away from smoking materials, sparks and other sources of combustion when refueling the generator.

Never attempt to “backfeed” or power a building through an installed receptacle. Backfeeding creates a dangerous shock hazard for the user and for utility personnel working on power lines.

⚠WARNING

Engine exhaust is very hot. Place the generator at least three feet or one meter away from buildings or other equipment during operation.

The muffler becomes very hot during operation and remains hot for several minutes after stopping the engine. Be careful not to touch the muffler while it is hot.

⚠CAUTION

Let the engine cool before storing the generator indoors.

Always make a pre-operation inspection before you start the engine.

Operate the generator on a level surface to prevent fuel spillage or oil starvation.

Know how to stop the generator quickly and understand operation of all controls.

Never permit anyone to operate the generator without proper instructions. Keep children and pets away from the generator when it is in operation.

Do not operate the generator in rain or snow and do not operate when wet.

UNBOXING AND ASSEMBLY

WI2600 Handle Operation

A retractable handle assembly has been designed to facilitate transport of the generator.

From the stowed position, simply depress the two yellow buttons on the end of the handle and extend the handle. To retract the handle, simply depress the same buttons and push the handle to the completely stowed position.

The handle should be retracted while the unit is running. After the generator has been running for an extended period, allow it to cool down for five minutes before extending the handle and transporting.

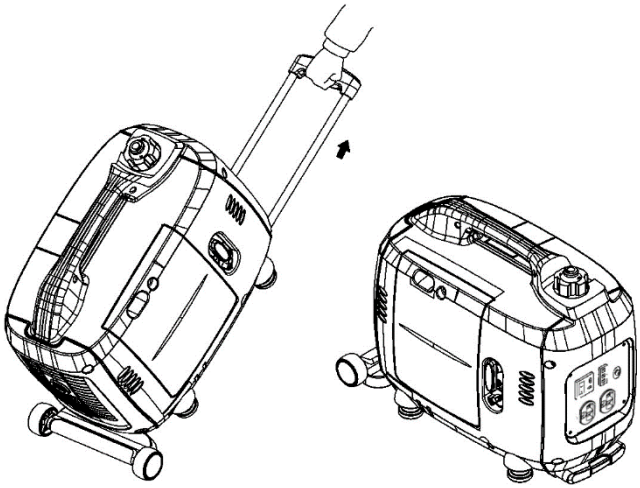

Mobile Light Kit Assembly Instructions

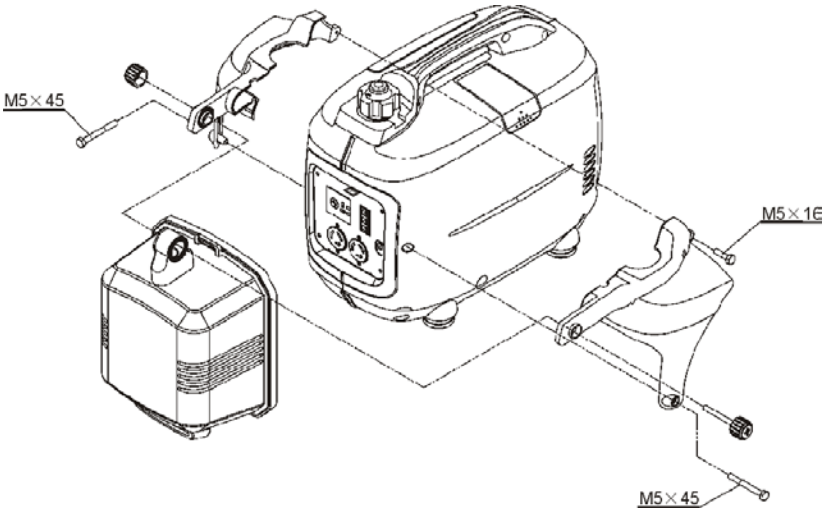

The accessory light kit is designed specifically for use on the WI2000 generator.

NOTICE This kit does not fit the WI2600 model.

Tools required: Phillips head screwdriver
Parts supplied:

- Light Kit Assembly
- Antiskid Round Nut
- Antiskid Round Stud
- Left Mount Plate of Light Kit
- Right Mount Plate of Light Kit
- Screw M5×45 2PCS
- Screw M5×16 1PCS

Assembly:

1. Remove the screw from the WI2000 generator and the screws from the side of the control plate;
2. Install the mounting plates on the generator using the M5×45 and M5×16 screws. DO NOT TIGHTEN SCREWS.
3. Insert the antiskid round stud through the light fixture, left and right mount plates and then lock the antiskid round stud.
4. After adjusting the angle of the light, tighten the antiskid round stud, M5×45 screws, and M5×16 screw in turn.

Before operating the light, be sure to read the owner's manual for operation and maintenance information along with safety precautions. The light switch must be in the OFF position when starting the generator.

NOTICE This light requires 500 watts of power. The total generator power output will be reduced by 500 watts when the lamp is turned ON.

COMPONENT LOCATIONS

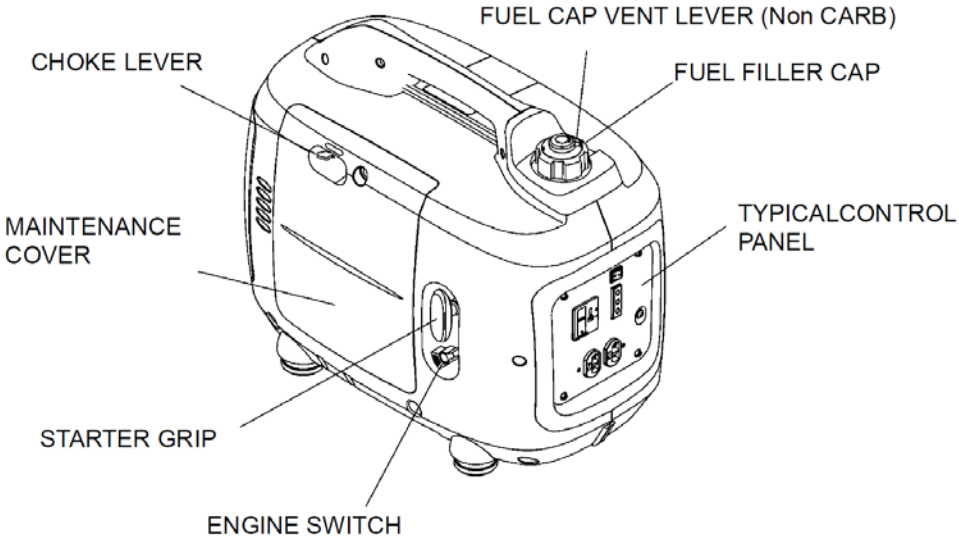

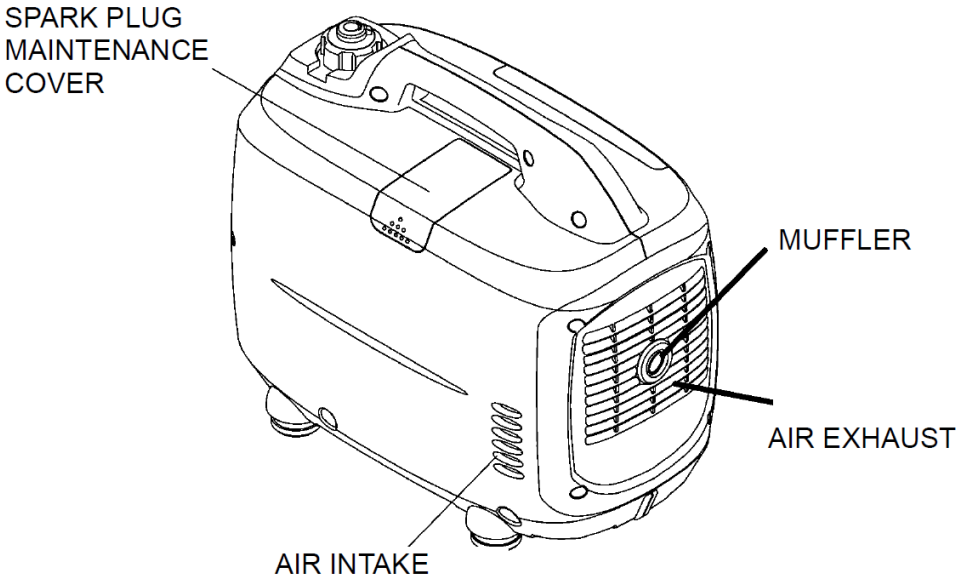

Control Panel

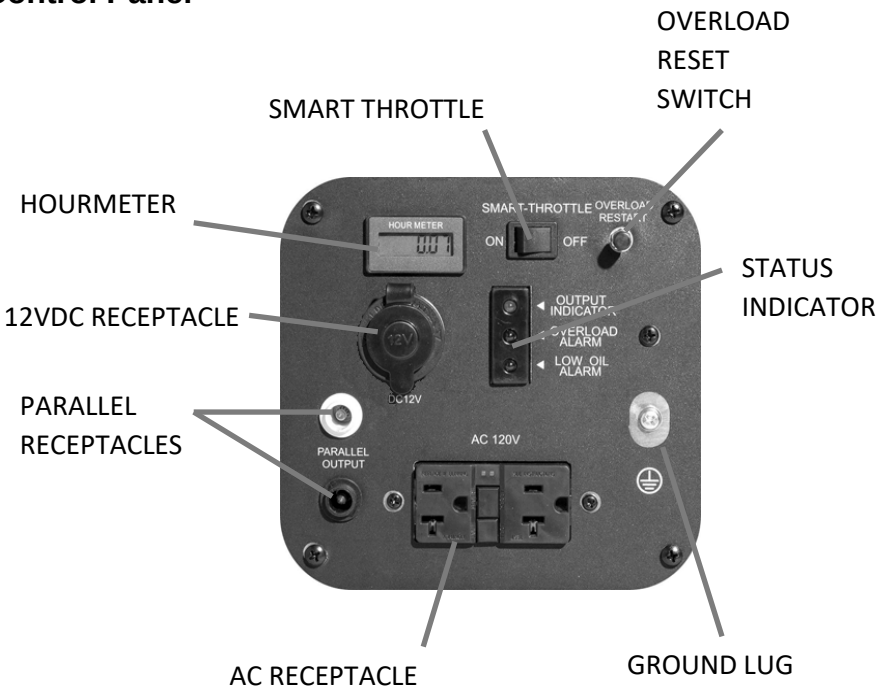

Serial Number Identification

The generator serial number identifies your particular unit and is important when ordering parts and accessories. The number is engraved on the engine block just above the oil fill port (inside the service door). We recommend recording the following information in case you need to contact Wanco Technical Support:

Model Number: WI_____

Serial Number: _____

Date of Purchase: _____

Place of Purchase: _____

PRE-OPERATION CHECK

Be sure to check the generator on a level surface with the engine stopped. Allow the engine to cool to avoid burns.

Check The Engine Oil Level.

Use a premium-quality 4-stroke engine oil certified to meet or exceed the API Service Classification SJ or higher. Select the appropriate viscosity for the expected temperature in your area. 10W – 30 oil is suitable for most climates.

NOTICE DO NOT use synthetic oil in Wanco inverter generators. Use of synthetic oil can interfere with break-in and can lead to excessive oil consumption.

SAE Viscosity Grades vs Temperature

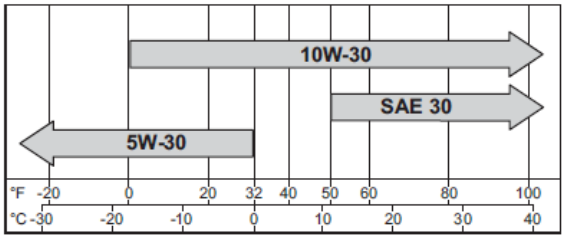

- Remove and wipe the oil dipstick with a clean rag.
- Insert the dipstick in the filler hole – but do not screw it in.
- Remove and carefully read the oil level.
- Add oil if necessary until the oil level is at the top of the dipstick marking.
- Reinstall the dipstick, securely screwing it until tight.

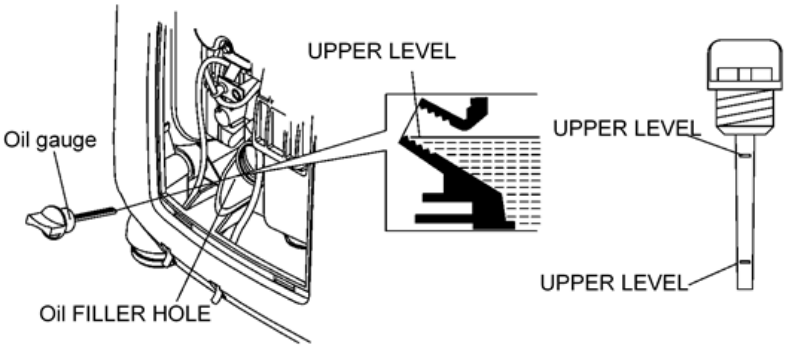

⚠CAUTION Running the engine with insufficient oil can cause serious engine damage. The Low Oil Alarm Shutdown will automatically stop the engine before the oil level falls below a safe limit. However it is still advisable to visually inspect the oil level regularly.

Fuel

Use regular automotive gasoline with no more than 10% ethanol.
Never use an oil/gasoline mixture or dirty gasoline.
Avoid getting dirt, dust or water in the fuel tank.
After refueling, tighten the fuel filler cap securely

⚠ DANGER Gasoline vapor is invisible but is extremely flammable and is explosive under certain conditions.
Refuel in a well-ventilated area with the engine stopped. Keep all smoking materials, sparks, and any other source of combustion away from the generator during refueling.

Do not overfill the fuel tank, and allow for fuel to expand as it warms. After refueling, make sure the tank cap is closed properly and securely.

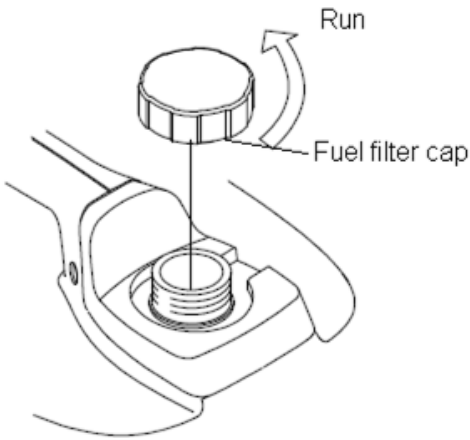

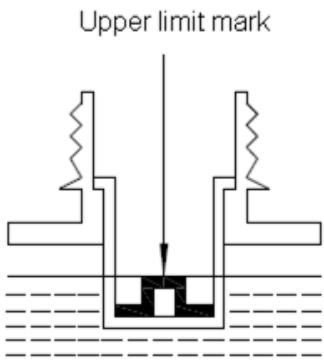

Be careful not to spill fuel when refueling. Spilled fuel or fuel vapor may ignite, If any fuel is spilled, wipe the area is dry before starting the engine.

Avoid repeated or prolonged contact with skin or breathing of vapor.

KEEP OUT OF REACH OF CHILDREN.

Air Cleaner

Remove the air cleaner cover and inspect the foam element. If the element appears dirty, wash it in warm soapy water, rinse and squeeze dry. Apply a small amount of clean engine oil before reinstalling.

⚠CAUTION Never run the engine without the air cleaner. Rapid engine wear will result from contaminants such as dust and dirt being drawn through the carburetor into the engine.

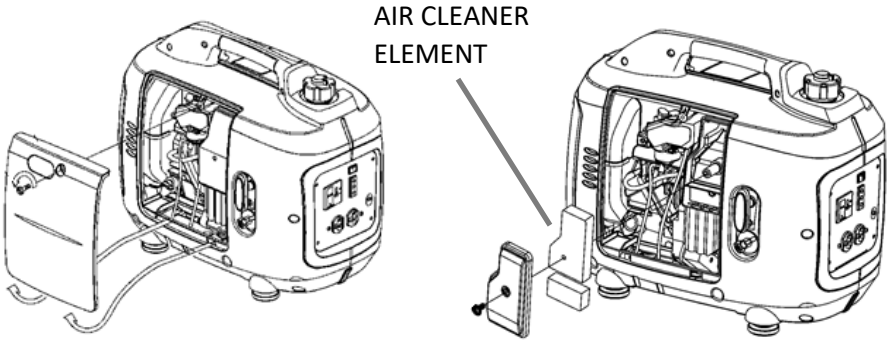

GENERATOR USE

Starting the Engine

NOTICE When starting the engine after adding fuel for the first time, after long term storage or after running out of fuel, turn the fuel valve lever to the "ON" position, then wait for 10 to 20 seconds before starting the engine.

Turn the combined engine switch / fuel valve to the ON position.

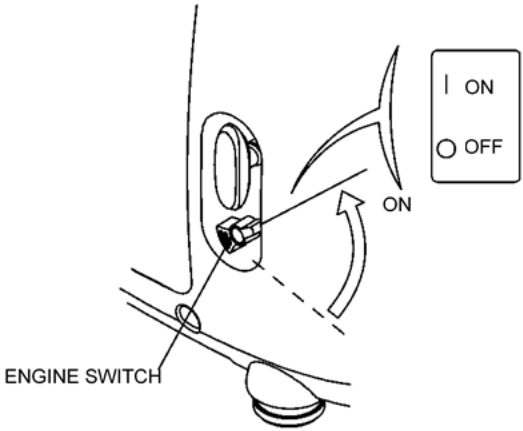

Move the choke lever to the START position.
The choke lever is located on the generator side panel.

Do not use the choke if the engine is already warm or the ambient air temperature is high.

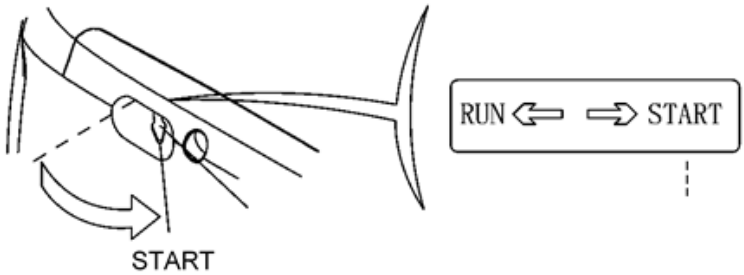

Manual Start: pull the starter grip lightly until resistance is felt then pull the starter grip briskly toward the arrow as shown below. Do not allow the starter grip to snap back. Return it slowly by hand.

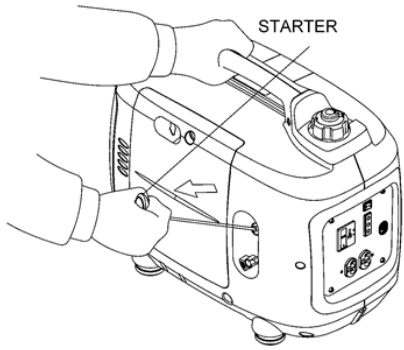

Move the choke lever to the RUN position as the engine warms up.

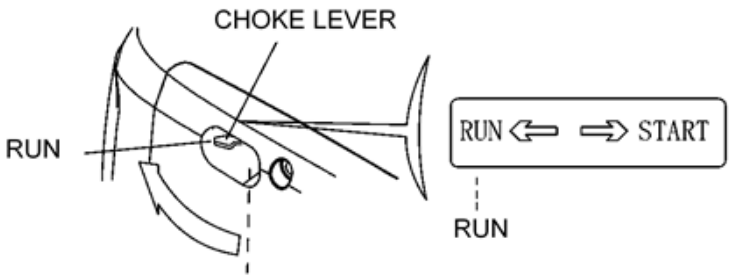

NOTICE If the engine stops and will not restart, check the engine oil level before further troubleshooting.

Shutting Down the Engine

To stop the engine in an emergency, turn the engine switch to the OFF (O) position.

1. Switch off the connected equipment and pull the inserted plug out.
2. Turn the engine switch to the OFF (O) position

Connecting Loads to the Generator

⚠WARNING Never connect a portable generator directly to any building service wiring through an installed receptacle. "Backfeeding" creates a risk of severe shock for the user and for utility personnel who may be working on power lines.

DO NOT connect a Wanco inverter generator to a building through a Double Throw Transfer Switch. Only connect loads directly to the generator using extension cords.

The neutral conductor in this generator is bonded to the generator frame ("bonded neutral"). Follow local codes regarding grounding of portable generator sets, depending on how it is used.

⚠CAUTION The total wattage of all appliances connected must be considered. Do not exceed the current limit specified for any one receptacle. Do not exceed the total power available from the generator.

When an extension cord is required, make sure you use the proper size and length.

- 16 gauge cords up to 100 feet long will adequately handle loads up to 10 amps.
- 14 Gauge Cords up to 50 feet long will adequately handle loads up to 15 amps.
- 12 Gauge Cords up to 100 feet long will adequately handle loads up to 15 amps.

Start the engine and make sure only the output indicator light (green) comes on.

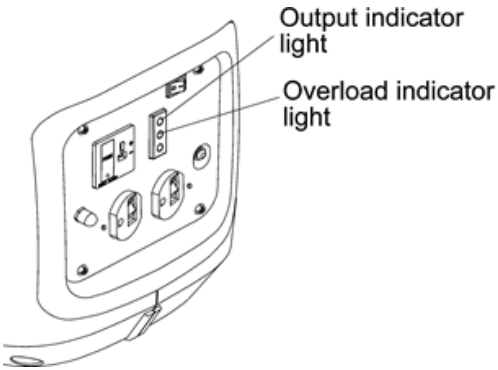

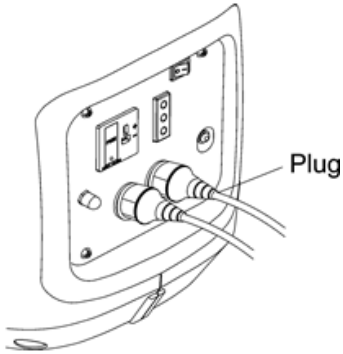

Confirm that the appliance to be used is switched off, and plug in the appliance.

⚠CAUTION Before connecting an appliance to the generator, check that its electrical rating does not exceed that of the generator.

Be sure that all appliances are in good working order before connecting them to the generator. If an appliance begins to operate abnormally, becomes sluggish, or stops suddenly, turn off the generator immediately. Disconnect the appliance and examine it for signs of malfunction.

Turn on the appliance and observe the generator for any abnormal operation.

NOTICE When an electric motor is started, both the overload indicator light (red) and the output indicator light (green) may go on simultaneously. This is normal but if the overload indicator light (red) stays on more than about four seconds, consult a service center.

Output and Overload Indicators

The output indicator light (green) will remain on during normal operating conditions. If the generator is overloaded or if there is a short in the connected AC appliance the output indicator will go out, the overload indicator light (red) will illuminate and all output current will be shut off.

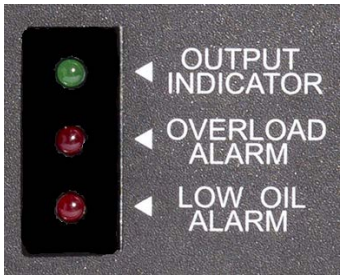

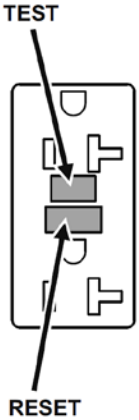

All WI generators include GFCI-protected duplex receptacles. The GFCI protection will trip if there is any fault current to ground, which is usually caused by faulty appliances or water entering into electrical devices –If the GFCI breaker trips, it is very important to locate and resolve the ground fault before resetting. Press the extended reset button located in the center of the receptacle to reset.

A GFCI trip will only affect one receptacle – voltage will still be present at the other receptacles.

GFCI protects against ground faults and is completely unrelated to overloads.

Overload Reset Switch

Should the generator maximum load capacity be exceeded, AC power will be cut off but the engine will stay running. Reduce the load and then press the Overload Reset Switch on the front panel. AC power will be restored immediately.

Low-Oil Protection System

The low oil protection system is designed to prevent engine damage caused by an insufficient amount of oil in the crankcase. Before the oil level in the crankcase falls below a safe limit, the low oil alarm system will automatically shut down the engine.

If the low oil alarm system shuts down the engine, the low oil alarm indicator light (red) will come on when you operate the starter and the engine will not run. If this occurs add engine oil before restarting. Damage caused by running the engine with insufficient oil is not covered under warranty.

Air Conditioning Operation

When operating in parallel (see the Parallel Generator Operation section) one WI2000 and one WI2600 or two WI2600 models will start and run most 15000 BTU units. For best results, both Smart Throttle switches should be in the off position. Bring the generators to normal operating temperatures before applying the air conditioning load. Always allow a 2-minute wait period when manually cycling an air conditioner off and on. A longer wait period may be required under unusually hot weather conditions. Additionally, all other loads should be turned off until the air conditioner has started and is performing normally. It is important to follow the air conditioner manufacturer's instructions for starting and restarting for proper operation. Some air conditioner manufacturers offer a start capacitor or rapid start kit as an extra cost option. The lack of a start capacitor can cause the air conditioner to draw too high a starting current and overload the generators. If you consistently have problems starting your air conditioner with the generators in parallel, contact your air conditioner dealer.

Smart Throttle System

When the Smart Throttle switch is placed in the ON position, engine speed is controlled to match the electrical load. The engine will idle at no load and will increase speed as more load is applied.

NOTICE

- The Smart Throttle system does not operate effectively if the electrical appliance requires constant fluctuations in power.
- When high electrical loads are connected simultaneously, turn the Smart Throttle switch to the OFF position to reduce voltage fluctuation or shutdown.
- In DC operation, turn the Smart Throttle switch to the OFF position. DC voltage may be too low when the Smart Throttle is ON.

When the Smart Throttle switch is placed in the OFF position, engine throttle is fixed at maximum speed, improving the ability of the generator to accept large or fluctuating loads.

High Altitude Operation

The reduced oxygen available at higher altitudes will reduce the maximum power available from the engine. High altitude performance can be improved somewhat by installing a special high-altitude jet in the carburetor. If you operate the generator at altitudes higher than about 5000 feet above sea level for extended periods, have your authorized dealer install a high altitude main jet.

Even with suitable carburetor jetting, engine horsepower will decrease approximately 3.5% for each 1000 feet or 305 meter increase in altitude. The effect of altitude on the horsepower will be greater than this if the carburetor is not re-jetted.

Be sure to restore the original jet before operating at lower elevation or engine damage due to an excessively lean fuel mixture may occur.

Ambient Temperature

Generator power generally degrades 1% for every 10° F (5.5° C) above 85° F (29° C). The normal operating range of the generator is -20° to 113° F (-29° to 45° C).

Do not operate the generator when the ambient temperature is above 113° F (45° C)

12VDC Power Operation

The DC receptacle may be used for charging 12 volt batteries only. The no load voltage is 15V-30V. Turn the Smart Throttle switch to the OFF position when using the DC receptacle.

1. Connect the charging cable to the DC receptacle of the generator and then to the battery terminals.

⚠CAUTION To prevent the possibility of creating a spark near the battery, connect the charging cable first to the generator then to the battery. Disconnect the cable first at the battery.

Connect the positive battery terminal to the positive charging cord. Do not reverse the charging cables, or serious damage to the generator and/or battery may occur.

⚠WARNING The battery gives off explosive gases; keep spark, flames and cigarettes away. Provide adequate ventilation when charging.

The battery may contain sulfuric acid (electrolyte). Contact with skin or eyes may cause severe burns. Wear protective clothing and a face shield.

- If electrolyte gets on your skin, flush with water.
- If electrolyte gets in your eyes, flush with water for at least 15 minutes and call a physician.

KEEP OUT OF REACH OF CHILDREN.

2. Start the engine

The DC receptacle may be used while the AC power is in use.

An overloaded DC circuit will trip the DC circuit fuse located behind the generator panel. Replace the fuse with one of the same size and rating (6.3A slow-blow 5x20mm). Use of a higher rated fuse may lead to generator damage.

PARALLEL OPERATION

Parallel operation features:

Two Wanco parallel ready generators can be connected together to increase the total power available to a load. The system seamlessly matches frequency and evenly distributes the load to each generator so one is not overloaded.

Any combination of two 2000W and 2600W Wanco parallel ready generators can be connected. Wanco offers two parallel kits (sold separately). WPK30 has a single 30A locking receptacle ideal for powering large loads such as RV air conditioners. WPK50 adds a 20A duplex receptacle to power a second load. Contact your dealer for the best kit for your particular application.

Parallel operation procedure:

⚠CAUTION Do not attempt to connect running generators in parallel. Damage to the generators may occur.

1. Turn off both generators and disconnect all the electrical devices from the generators
2. Connect the parallel kit to each generator by inserting a pair of leads plus ground wire from the parallel box to the parallel receptacles and ground lug on the panel.
3. Start both generators and confirm that both green "RUN" lights are illuminated. The Smart Throttle system may be used as long as the Smart Throttle setting of both generators is the same.
4. Plug an electrical appliance into the parallel cable receptacle box and switch on the appliance.

⚠CAUTION

- The electrical appliance load cannot exceed the rated output of parallel generators or the parallel box circuit breaker(s).
- Do not use the receptacles on the control panel of either generator.
- Do not disconnect the parallel cables during operation.

Shutting off the generators:

1. Turn off the power of electrical appliance then, pull out the receptacle plug.
2. Turn off the two generators.
3. Disconnect the parallel kits from the generators.

MAINTENANCE

The purpose of the maintenance and adjustment schedule is to keep the generator in optimum operating condition. Shut off the engine before performing any maintenance.

Maintenance Schedule

REGULAR SERVICE PERIOD Perform at every indicated monthly or operating hour interval whichever occurs first		EACH USE	1ST MO or 20H	3 MO or 30H	6 MO or 100H	200H
ITEM						
Engine oil	Check	O				
	Change				O	
Air cleaner	Clean			O		
	Replace					O
Spark plug	Clean/Gap				O	
Spark arrester	Clean				O	
Fuel sediment cup	Clean				O	
Valve clearance	Check/adjust				O	
Fuel tank and strainer	Clean					O
Fuel lines	Check	Every 2 years (Replace as necessary)				

NOTE: Service filters more frequently when used heavily or in dusty areas.
Valve clearance is best adjusted by a qualified small-engine mechanic.

Changing Engine Oil

NOTICE Drain the oil while the engine is still warm to assure rapid and complete drainage.

1. Remove the oil dipstick and wipe the oil dipstick with a clean rag.
2. Remove the drain bolt and drain the oil into a suitable container.
3. Retighten the drain bolt securely.
4. Refill with the recommended oil.
5. Insert the dipstick in the filler hole – but do not screw it in.
6. Remove and carefully read the oil level.
7. Add oil if necessary until the oil level is at the top of the dipstick marking.
8. Reinstall the dipstick, securely screwing it until tight.

Dispose of used motor oil in a responsible manner. Do not throw it in the trash or pour it on the ground.

Air Cleaner Service

A dirty air cleaner will restrict airflow to the carburetor and allow dirt into the engine. Service more frequently when operating the generator in extremely dusty areas.

⚠CAUTION Never run the generator without the air cleaner. Rapid engine wear may result.

Remove the air cleaner cover and inspect the foam element. If the element appears dirty, wash it in warm soapy water, rinse and squeeze dry. Apply a small amount of clean engine oil before reinstalling.

Spark Plug Service

To ensure proper engine operation, the spark plug must be the correct part, properly gapped and free of deposits.

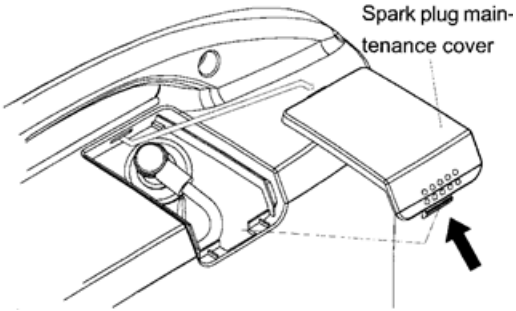

1. Remove the spark plug maintenance cover.
2. Remove the spark plug cap.
3. Clean any dirt from around the spark plug base.
4. Use the wrench to remove the spark plug.
5. Visually inspect the spark plug. Discard it if the insulator is cracked or chipped. Clean the spark plug with a wire brush if it is to be reused.
6. Measure the plug gap with a feeler gauge. The gap should be 0.024-0.028in (0.6-0.7mm). Correct as necessary by carefully bending the side electrode.
7. Install the spark plug carefully by hand to avoid cross-threading.
8. After a new spark plug has been seated by hand, it should be tightened 1/2 turn with a wrench to compress the sealing washer. If a used plug is being reinstalled, it should only require 1/8 to 1/4 turn after being seated.
9. Reinstall the spark plug cap.

The spark plug must be securely tightened.

NOTICE Use only resistor-type spark plugs. Use of non-resistor-type spark plugs will result in no AC output.

TRANSPORTATION AND STORAGE

If you transport the generator in a vehicle, drain all fuel from the generator.

Inverter generators are very light and compact, but they are easily tipped over. The generator should be secured to prevent damage when transporting.

Do not operate the generator while it is on or in a vehicle. Take the generator away from the vehicle and use it in a well ventilated area.

If the generator is left in an enclosed vehicle for many hours, high temperature inside the vehicle may cause residual fuel to vaporize resulting in a possible explosion.

Extended Storage

Drain the fuel before storing the unit for an extended period. Carburetor fouling from stale or evaporated gasoline is a leading cause of engine starting problems.

1. Drain all gasoline from the fuel tank into an approved gasoline container.
2. Loosen the carburetor drain screw and drain the gasoline from the carburetor and fuel line into a suitable container.
3. Tighten the drain screw securely.
4. Change the engine oil.

TROUBLESHOOTING

Basic troubleshooting steps are outlined below. If your generator still does not perform correctly after confirming these steps, you should contact Wanco to locate an Authorized Service Dealer.

If the engine will not start or will not run correctly, confirm the following:

- The fuel tank has plenty of gasoline and is free of debris and water.
- The oil level is at the Full mark (but do not overfill the oil).
- The engine switch is ON (I).
- The choke is in the correct (Start or Run) position.
- The sparkplug wire is securely connected to the sparkplug.

If there is no voltage at the AC receptacles, disconnect all loads and confirm the following:

- The GFCI receptacle has been inspected and reset if necessary.
- The Overload Indicator Light is not ON.
- Press the Inverter Reset Switch on the control panel.

NOTICE If the Output Indicator Light is ON, check the appliance for any defect or fault. If the Output Indicator Light is OFF and the Overload Indicator Light in ON, contact Wanco to locate an Authorized Service Dealer.

If there is no voltage at the 12VDC receptacle, shut off the generator and remove the control panel to inspect the 12VDC fuse. Replace a blown fuse with one of the same size and rating (6.3A slow-blow 5x20mm). Use of a higher rated fuse may lead to generator damage.

SPECIFICATIONS

Generator

Model	WI2000	WI2600
Rated frequency (Hz)	60	
Rated voltage (V)	120	
Rated current (A)	13.3	19.2
Max current (A)	16.6	21.7
Rated output (W)	1600	2300
Max output (W)	2000	2600
DC Output	12 V, 5.0 A	

Engine

Model	KG158	KG166
Type	4 stroke, air-cooled, OHV	
Displacement- CC	106	171
Rated Power- HP@RPM		3.3@3600
Starting System	Recoil (Rope)	
Spark Plug	UR5	F6RTC
Fuel	Automotive Unleaded Gasoline	
Lube Oil	SAE 10W30 (see viscosity chart)	
Oil Capacity- qt (L)	.42 (.4)	.63 (.6)
Fuel Tank Capacity- gal (L)	1 (3.8)	1.3 (4.9)
Rated Load Run Time	3.5 Hrs	3.25 Hrs
Noise dB@23' no-load/full load	57-61	58-65

Tune Up Specifications- all models

Spark Plug Gap	0.024-0.028 in (0.6-0.7 mm)

Dimensions

Model	WI2000	WI2600
LxWxH in	20x11x16.75	23.3x13x18.9
Dry weight (lb)	48.5	68.2

WIRING DIAGRAM

WI2000 and WI2600